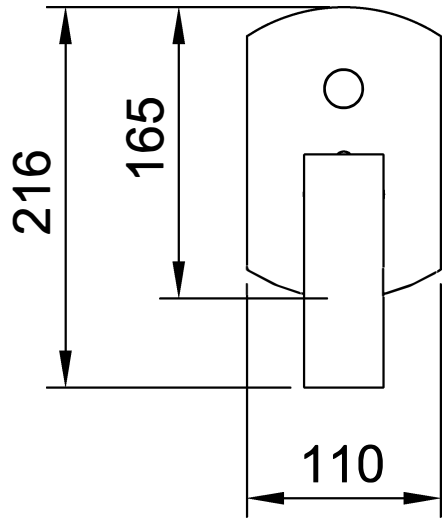
216
165
110

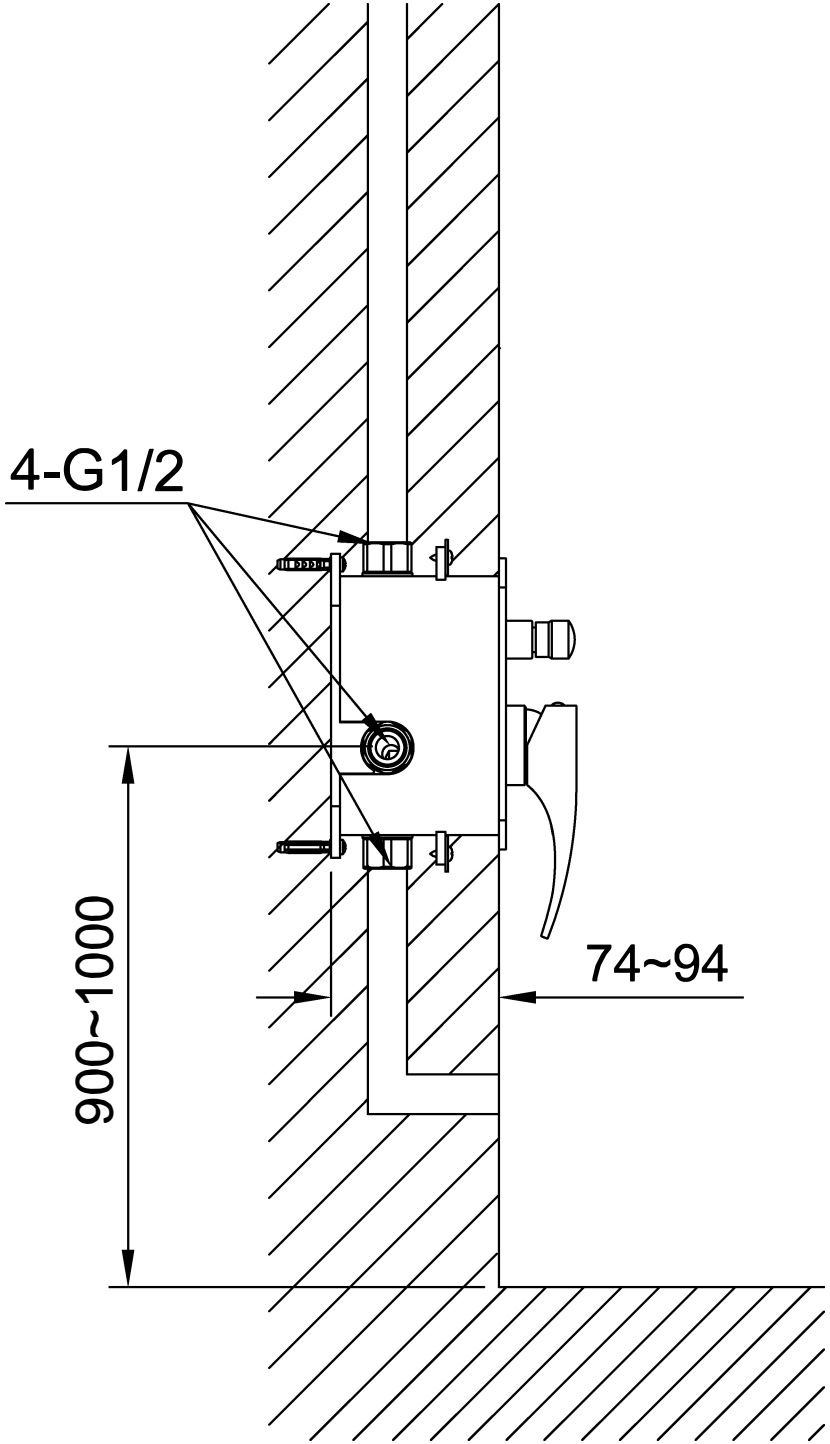
4-G1/2
900~1000
74~94