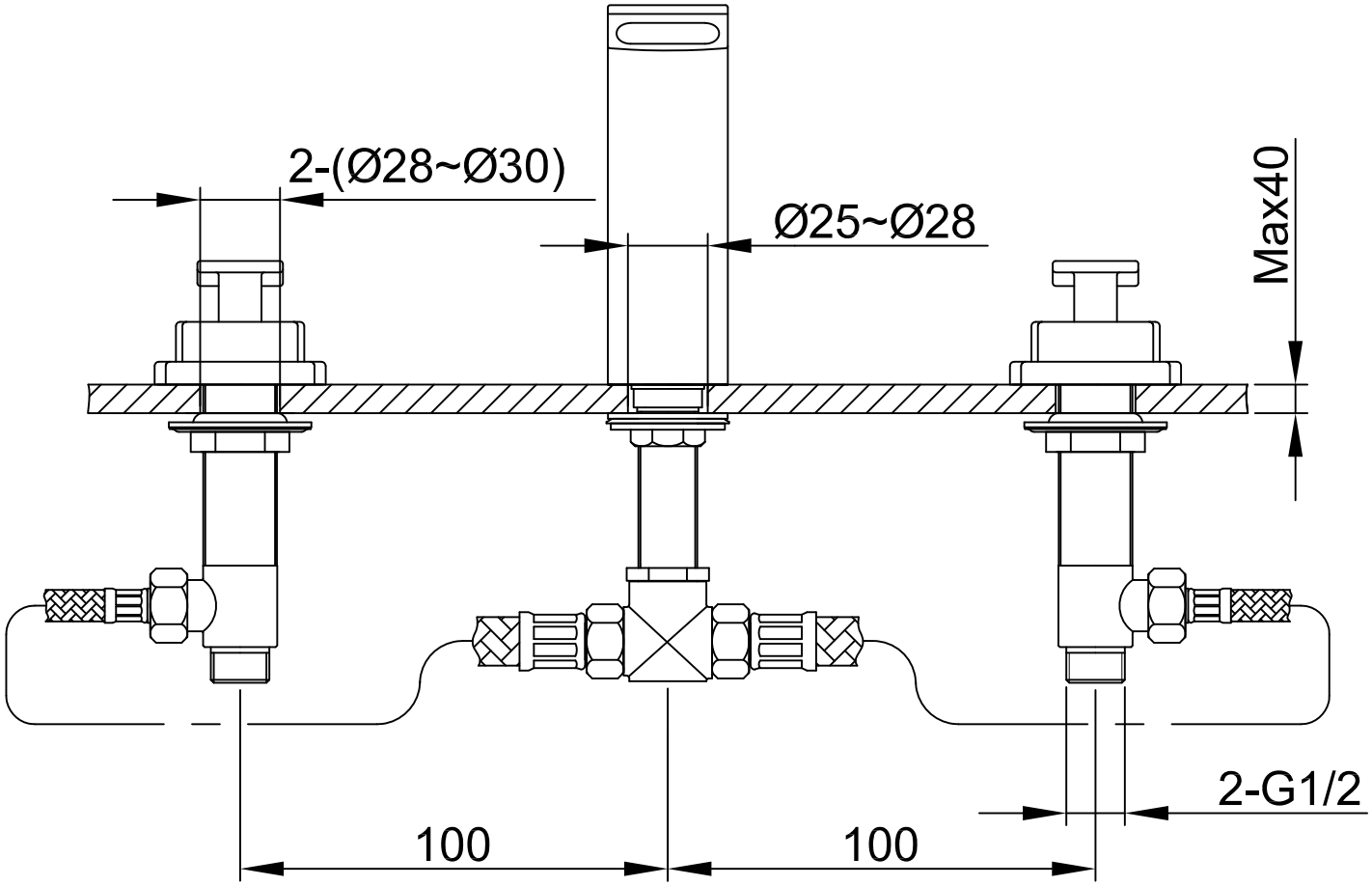

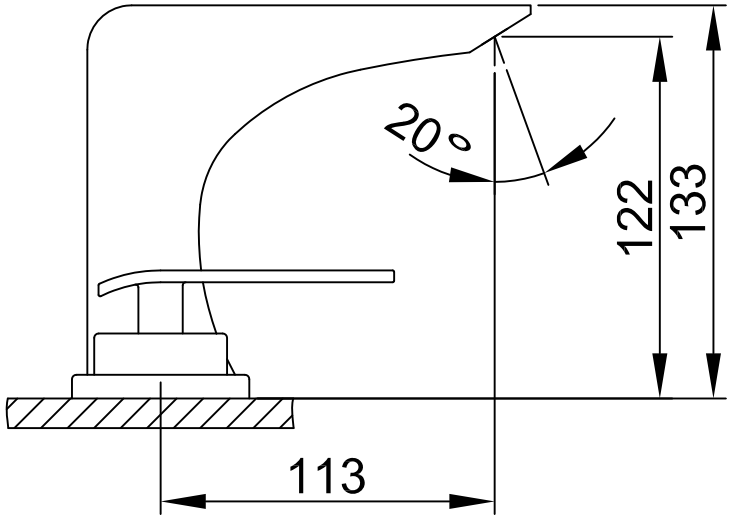

85 1583C